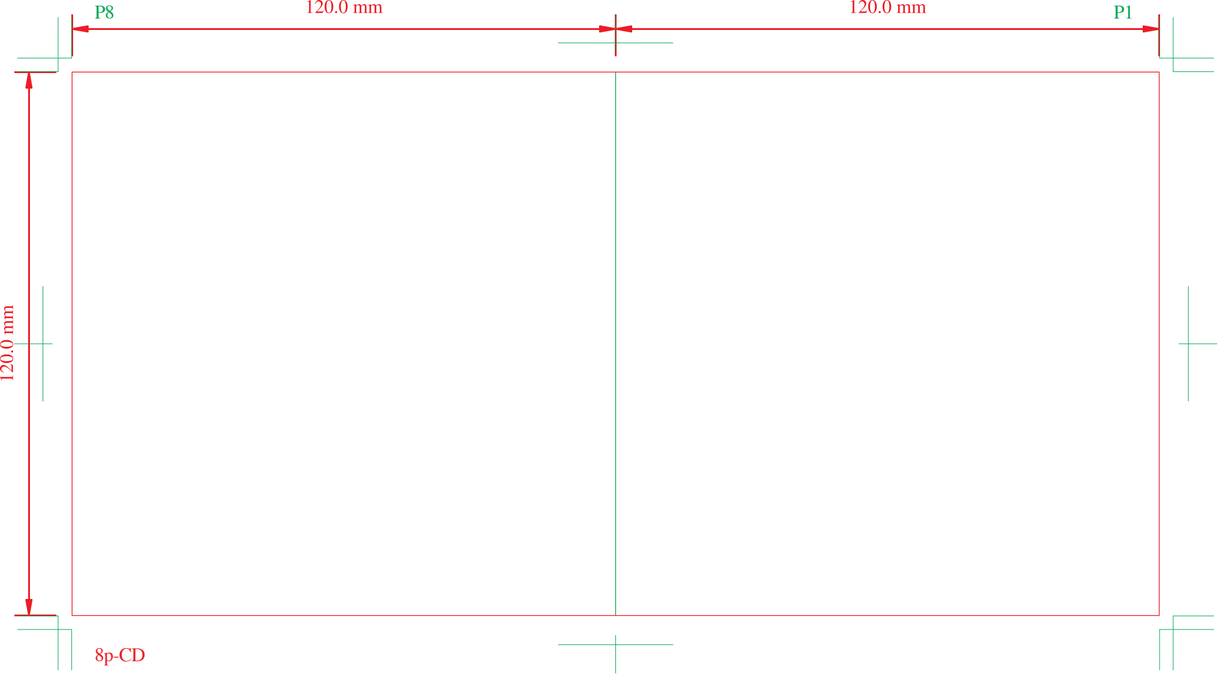
P8
120.0 mm
120.0 mm
P1
120.0 mm
8p-CD

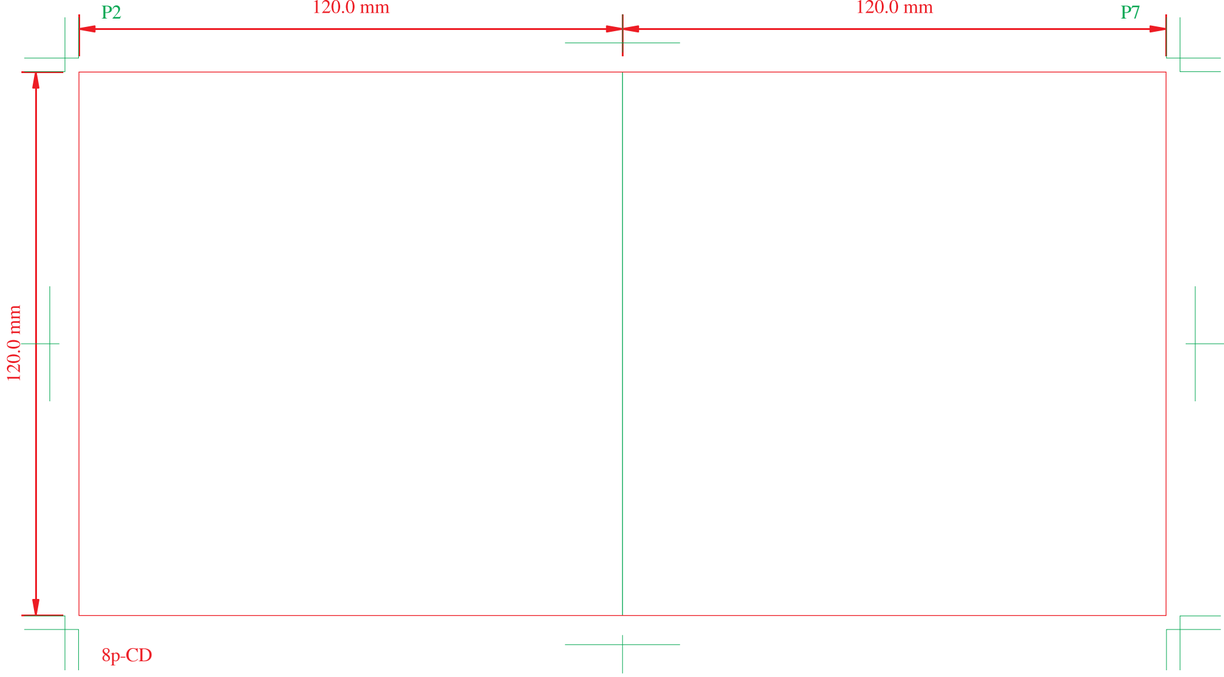
P2
120.0 mm
120.0 mm
P7
120.0 mm
8p-CD

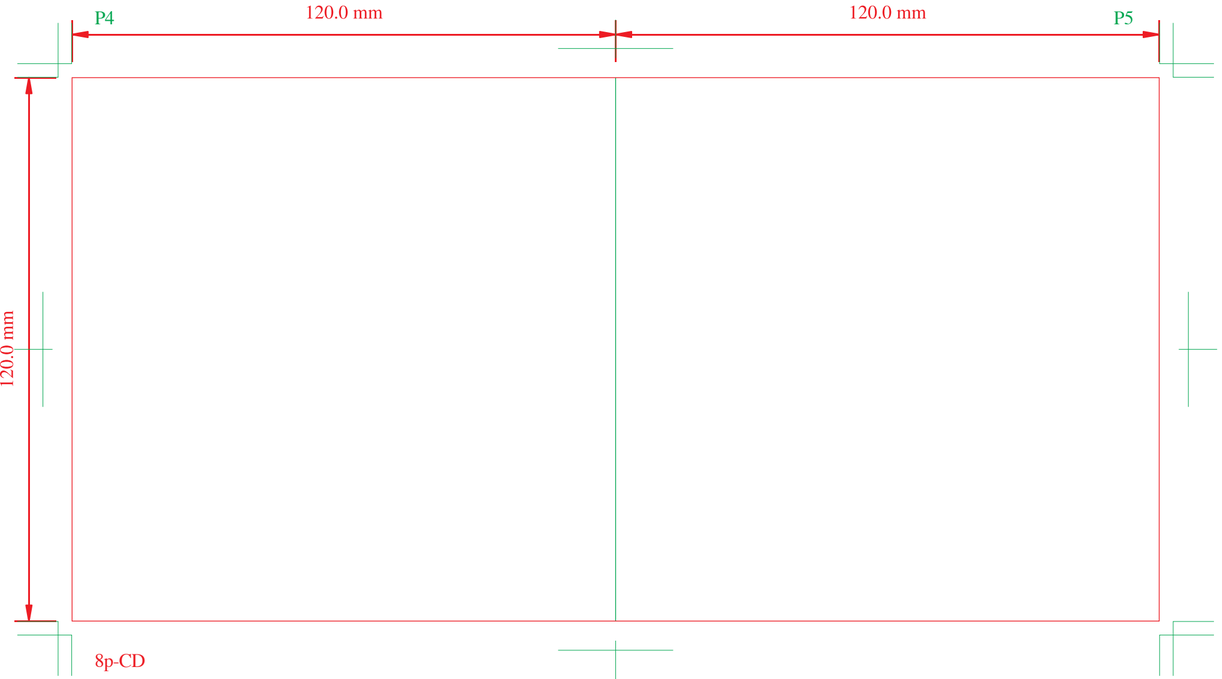
P4
120.0 mm
120.0 mm
P5
120.0 mm
8p-CD

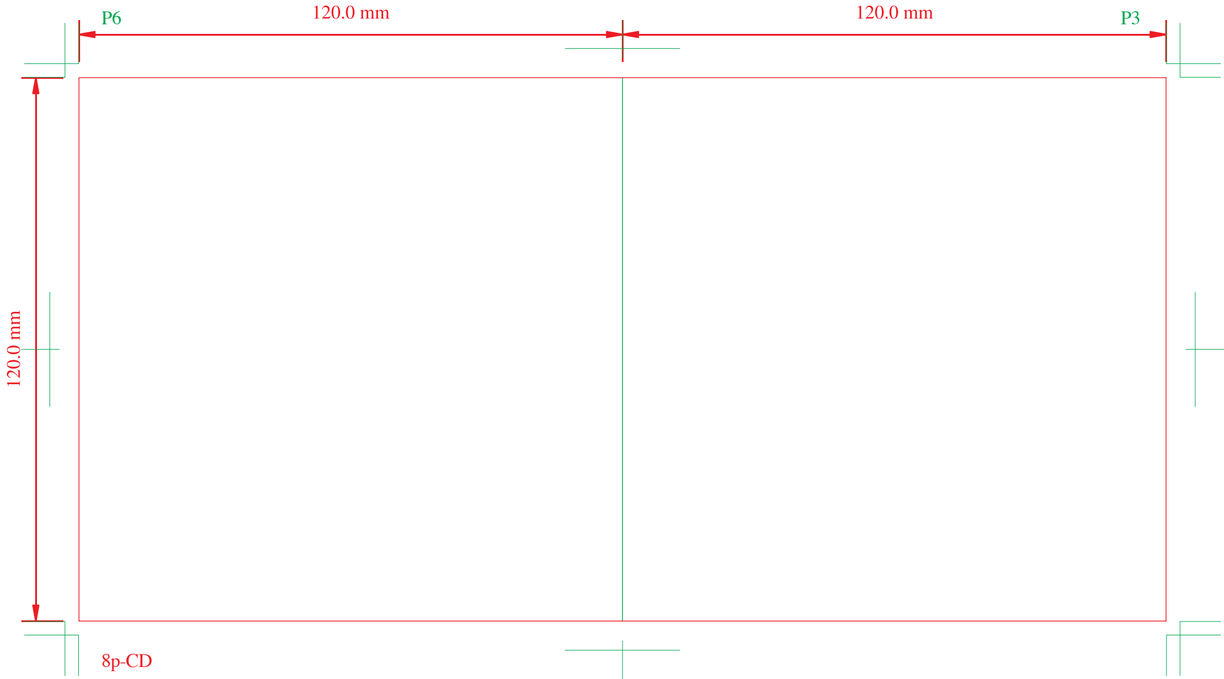
P6
120.0 mm
120.0 mm
P3
120.0 mm
8p-CD